Taunus

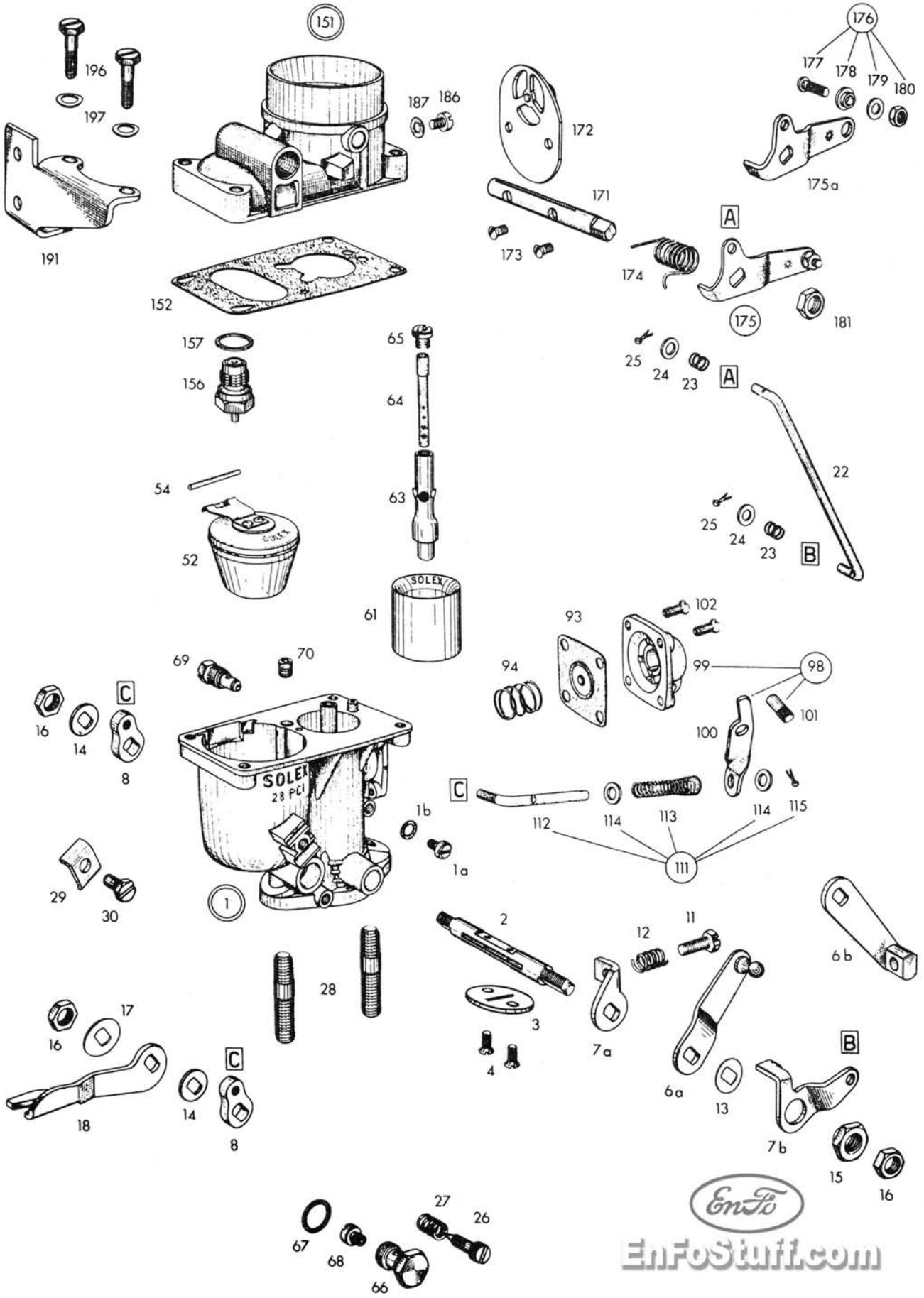

Exploded view of the Solex 28 PCI carburetor used on the Ford Taunus 12M.